TECHNICAL DRAWING

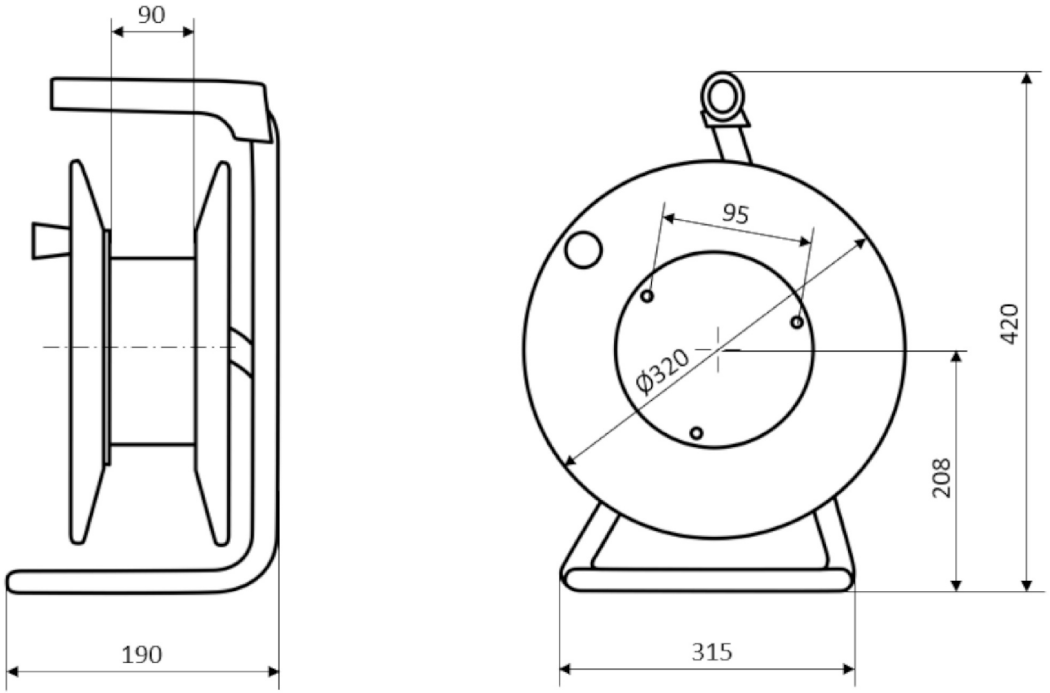

Kabeltrommel
Cable reel

Artikelnummer: 39100301500303
Article number: 39100301500303