BRUMBERG
Light. Since 1873.

LED converter 350 mA, trailing-edge phase dimmable

Article no. 17640010

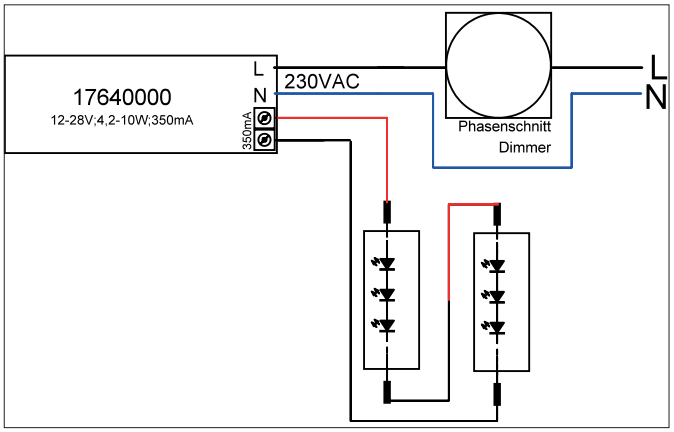

IP20 230V PHASE

Tender
LED converter 350 mA, trailing-edge phase dimmable, white, Rectangular. Material: Plastic, Degree of protection: according to DIN EN 60529 IP20, Protection class: (EN 61140) II, Voltage: 230V AC 50Hz, Power: 10 W, Dimmable: Yes, Type of dimming: Trailing-edge phase.

Article data	
Article no.	17640010
GTIN	4251433923886
Short description	LED converter 350 mA, trailing-edge phase dimmable
Material	Plastic
Colour	white
Shape	Rectangular
Length	102 mm
Width	38 mm
Hight	21 mm
Weight	0.069 kg
stamp	ENEC 05
Conformance	CE, UKCA

All technical data as well as, weight and measurements are based on rated values and had been carefully prepared. We reserve the right to make technical changes which are are important in progressing. Product pictures are examples and can vary from the original. Subject to errors.
Date 11.02.2026 Orders are placed under our general terms and conditions under https://www.brumberg.com/en/terms-and-conditions/general-terms-and-conditions-of-sale/

BRUMBERG
Light. Since 1873.

LED converter 350 mA, trailing-edge phase dimmable

Article no. 17640010

Operating technology of driver	
AC nominal voltage min	198 V
AC nominal voltage max	264 V
Frequency min	47 Hz
Frequency max	63 Hz
Protection class	II
Degree of protection	IP20
Power	4.2 W
Power max.	10 W
Output_ripple_current	20
Starting current	2 A, 50 µs
Suitable for emergency lighting	No
measure point (tc)	70 °C
Version	without
Power factor	0.95
max. no. lights on B16 A	50
Output voltage max	28.00 V
Output voltage min.	8.50 V
Flicker value Pst LM	1.00
Control	Trailing-edge phase
Number of poles	2
Enviroment temprature (ta)	-25 °C up to +45 °C
Measure point (tc)	max. +70 °C
Output current	350 mA
Safety devices against thermal overload	yes

Packing data	
Gross weight	0.088 kg
Length of packaging	60 mm
Packaging width	27 mm
Packaging hight	150 mm
Disposal at end of life	This product must not be disposed of with household waste. You are obliged, to dispose of such electrical waste separately. By disposing of electrical waste and other old or defective electronics separately, you support recycling or other forms of re-use. In that way you help to take care and to avoid that harmful substances get into the environment.

All technical data as well as, weight and measurements are based on rated values and had been carefully prepared. We reserve the right to make technical changes which are are important in progressing. Product pictures are examples and can vary from the original. Subject to errors.
Date 11.02.2026 Orders are placed under our general terms and conditions under https://www.brumberg.com/en/terms-and-conditions/general-terms-and-conditions-of-sale/