BRUMBERG
Light. Since 1873.

TIRREL-S LED recessed spot set, DALI dimmable, incl. connection box

Article no. 41444073

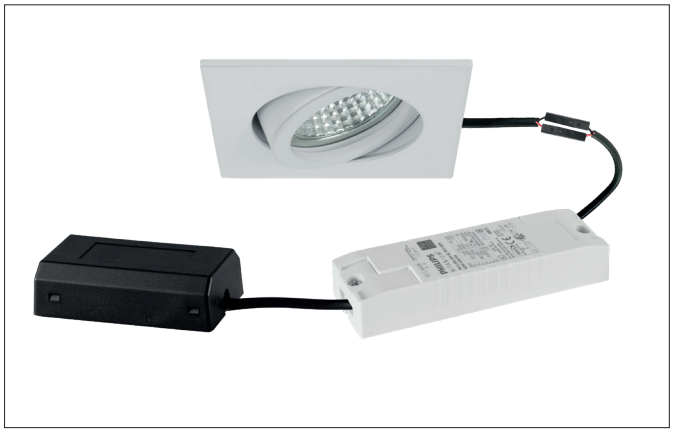

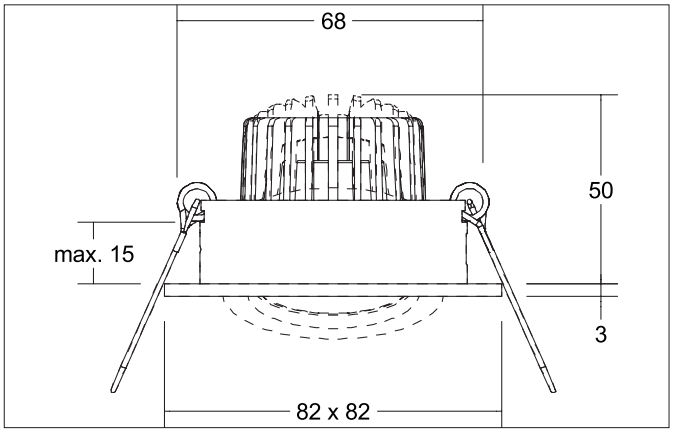

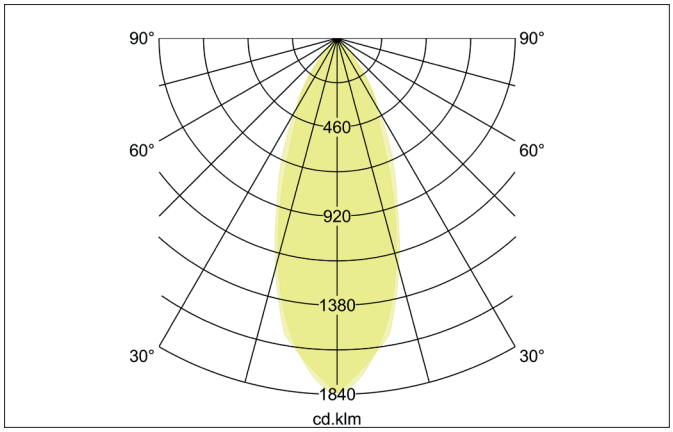

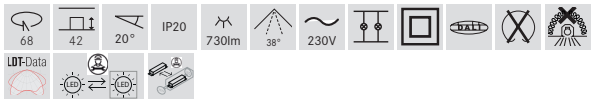

Tender

LED recessed spot set, DALI dimmable, incl. connection box, Square.Toolless ceiling installation by installation springs. Ceiling cut-out Ø 68 mm, Installation depth 42 mm, Length 82 mm, Width 82 mm, Weight 0,285 kg, Reflector silver with rotattionssymmetrical, deep, wide distributed light intensity. Cover glass transparentLuminous flux 730 lm, Power 1 x 6 W, Light colour warm white, Correlated color temprature (CCT) 3.000 K, Colour rendering index CRI > 80, Housing material: Aluminium / Glass / Plastic, Colour: white matt, Permissible ambient temperature (ta): -20 °C up to +25 °C, Protection class (EN 61140): II, Degree of protection (DIN EN 60529): IP20. With electronic driver, DALI-2 dimmable.

Product Benefits

- LED recessed spot in square design made of solid aluminum with LED module 6 W (3,000 K) and dimmable DALI converter WITHOUT glow-in-the-dark effect.
- Ceiling cut-out 68 mm, diameter 82 mm, installation depth 50 mm, IP20.
- Pivoting range 25°.
- Large color variation. Without visible snap ring.
- Classic, formally restrained design.
- In the same optics also in GX5.3 or GU10 version and as a dimmable trailing-edge phase or DALI and as a loudspeaker version.
- In addition, in the same surface structure and in the same color also available in round design.

All technical data as well as, weight and measurements are based on rated values and had been carefully prepared. We reserve the right to make technical changes which are are important in progressing. Product pictures are examples and can vary from the original. Subject to errors.
Date 23.01.2026 Orders are placed under our general terms and conditions under https://www.brumberg.com/en/terms-and-conditions/general-terms-and-conditions-of-sale/

BRUMBERG
Light. Since 1873.

TIRREL-S LED recessed spot set, DALI dimmable, incl. connection box

Article no. 41444073

Article data	
Article no.	41444073
GTIN	4251433951100
Series name	TIRREL-S
Short description	LED recessed spot set, DALI dimmable, incl. connection box
Material	Aluminium / Glass / Plastic
Colour	white matt
Type of surface	Matt
Shape	Square
Length	82 mm
Width	82 mm
Built-in diameter min.	67 mm
Built-in diameter max.	68 mm
Installation depth	42 mm
Hight	3 mm
Scope of delivery	Incl. 5-pole connection box
Weight	0.285 kg
D licence plate	No
Conformance	CE, UKCA

Lighting technology	
Colour temperature	3.000 K
Light colour	white
Light output	Direct
Luminous flux	730 lm
System efficiency	122 lm/W
Colour rendering	CRI > 80
Reflector	Faceted
Reflector colour	silver
Beam angle	38°
Light sharing	Symmetric
Adjustable color temperature	No

Operating technology of the luminaire	
Article No. of used light source	12924383
Hight	32 mm
Outer diameter	50 mm
Lamp holder	Plug&Play
Power	6 W
Voltage type	DC
Current	350 mA
Lamp	LED
Protection class	III
Degree of protection	IP20
Energy efficiency class	D
Bulb change possible	The light source of this luminaire may only be replaced by the manufacturer or a service technician commissioned by him or a similarly qualified person.

All technical data as well as, weight and measurements are based on rated values and had been carefully prepared. We reserve the right to make technical changes which are are important in progressing. Product pictures are examples and can vary from the original. Subject to errors.
Date 23.01.2026 Orders are placed under our general terms and conditions under https://www.brumberg.com/en/terms-and-conditions/general-terms-and-conditions-of-sale/

BRUMBERG
Light. Since 1873.

TIRREL-S LED recessed spot set, DALI dimmable, incl. connection box

Article no. 41444073

Operating technology of driver	
Article No. of used driver	17684020
Length	130 mm
Width	42 mm
Hight	22 mm
AC nominal voltage min	198 V
AC nominal voltage max	264 V
Frequency max	60 Hz
Dimmable	Yes
Control	DALI-2
Starting current	1 A, 15,2 µs
Power min	2.8 W
Power	7 W
Output current	350 mA
Degree of protection	IP20
Protection class	II
Flicker-free	Yes

Mounting technology	
Mounting method	Recessed mounting
Place of installation	Ceiling-mounted
Adjustability	Pivoted
Swivel angle	20°
Max. ceiling thickness	15 mm
Further references	No cover with thermal insulation material
Material cover	Glass transparent
Circlip	Without circlip
Suitable for through-wiring	Yes

Packing data	
Gross weight	0.36 kg
Length of packaging	140 mm
Packaging width	110 mm
Packaging hight	120 mm
Disposal at end of life	This product must not be disposed of with household waste. You are obliged, to dispose of such electrical waste separately. By disposing of electrical waste and other old or defective electronics separately, you support recycling or other forms of re-use. In that way you help to take care and to avoid that harmful substances get into the environment.

Optional accessories
Article no.: 5327 Leaf spring set (2 pieces) https://www.brumberg.com/fileadmin/products/Datenblatt_00532700_2021_DE.pdf

All technical data as well as, weight and measurements are based on rated values and had been carefully prepared. We reserve the right to make technical changes which are are important in progressing. Product pictures are examples and can vary from the original. Subject to errors.
Date 23.01.2026 Orders are placed under our general terms and conditions under https://www.brumberg.com/en/terms-and-conditions/general-terms-and-conditions-of-sale/