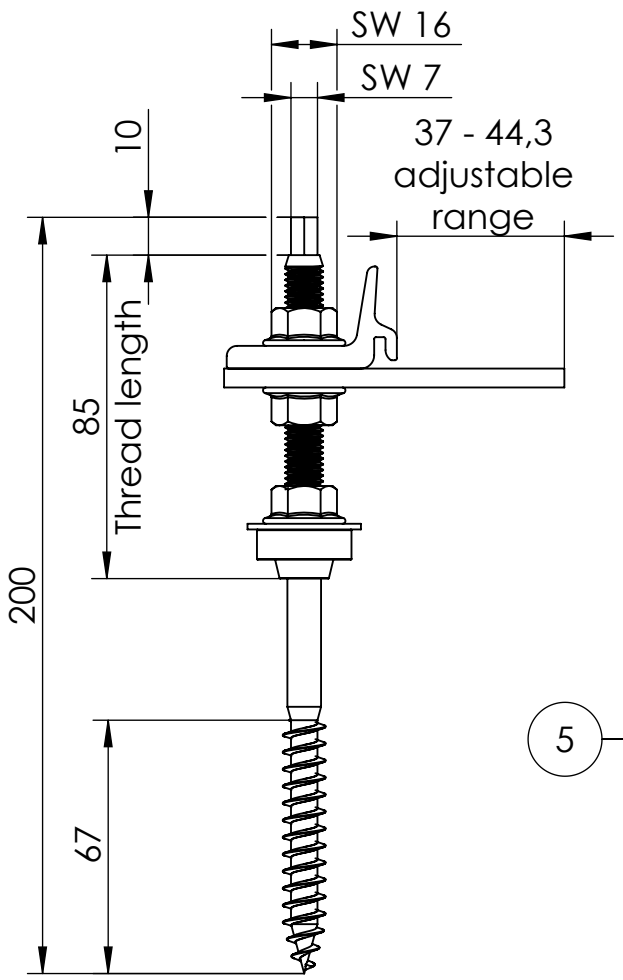

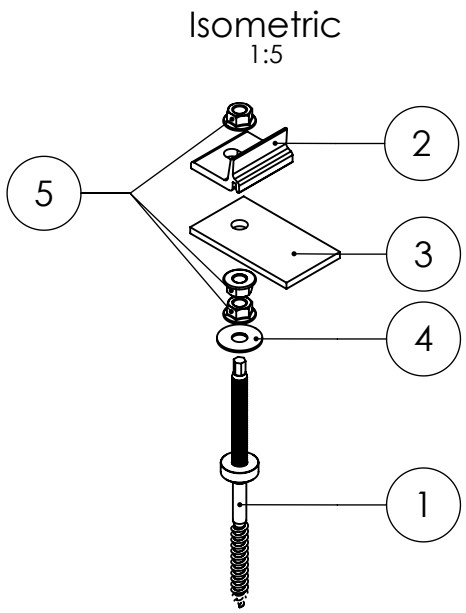

Pos.No.	Designation	Material	Quantity
1	HangerBolt Solo M10x200 + EPDM	A2/ EPDM	1
2	Climber 36/50 M10	EN AW 6063 T66	1
3	Adapter plate M10 HangerBolt Climber	Aluminium	1
4	Washer 10,5x30x1,5	A2	1
5	Hexagon flange nut serrated - ISO 4161 - M10	A2-70	3

K2 Systems GmbH
Haldenstr. 1
71272 Renningen
Germany
+49 7159 42059-0

Designation:

Data sheet SingleRail Climber HangerBolt M10x200

	Name	Date	Material:		Item no.:	2003273	A4
Designed	Gerstenberger	04.06.2020	see table				
Approved	M. Schuler	20.05.2025	Surface: -		Drawing no.:	02-273-02	All dimensions in mm
Last change	S. Frey	20.05.2025	Weight: ca. 241.6 g/pc	Scale: 1:2			Sheet 1 of 1

This drawing is the sole property of K2 Systems GmbH. It is protected by copyright and may only be copied, reproduced or distributed to a third party with explicit permission!