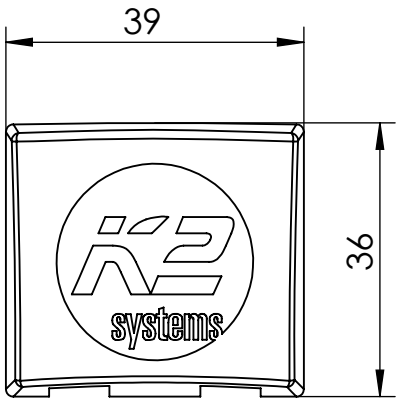

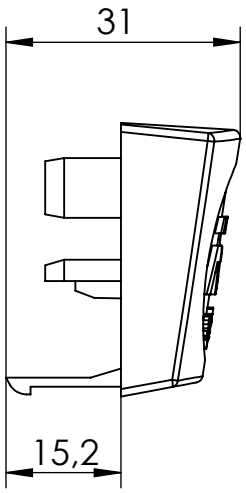

Isometric

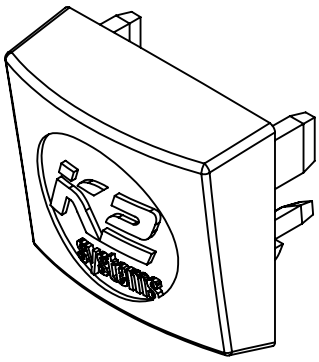

K2 Systems GmbH
Haldenstr. 1
71272 Renningen
Germany
+49 7159 42059-0

Designation:

Data sheet SingleRail 36 EndCap

	Name	Date	Material:		Item no.:	1004767	A4
Designed	M. Preiß	31.01.2025	PA Typ 6				
Approved	A. Soumpalas	09.09.2025	Surface: Surface eroded VDI3400 Ref.No. 35		Drawing no.:	04-067-05	All dimensions in mm
Last change	C. Niedermaier	09.09.2025	Weight: ca. 8.4 g/pc	Scale: 1:1			Sheet 1 of 1

This drawing is the sole property of K2 Systems GmbH. It is protected by copyright and may only be copied, reproduced or distributed to a third party with explicit permission!