Item-No.	L [mm]	Weight [g]
1002387	20 (±0,42)	11,7
2002740	25 (±0,42)	13,7
2002035	30 (±0,42)	15,7

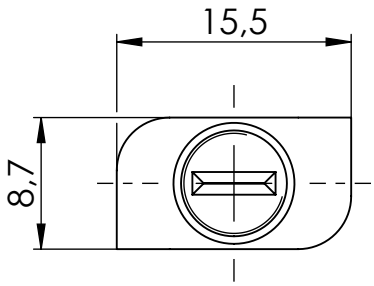

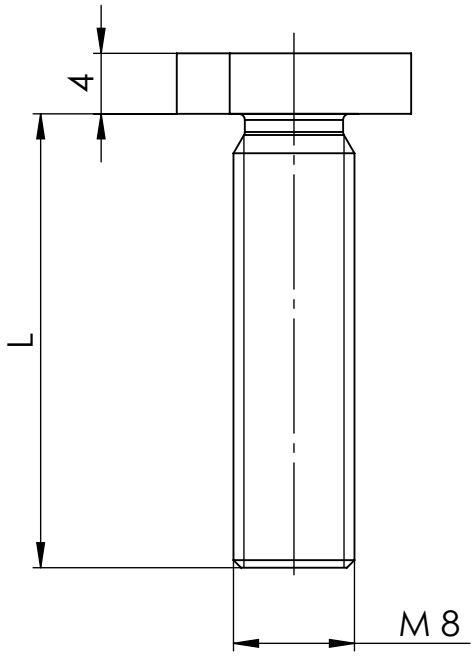

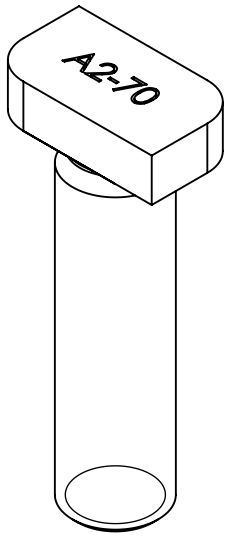

Isometric

K2 Systems GmbH
Haldenstr. 1
71272 Renningen
Germany
+49 7159 42059-0

Designation:

Data sheet
T-Bolt 20/12 M8

	Name	Date	Material:		Item no.:	A4
Designed	S. Frey	26.03.2020	1.4301 (X5CrNi18-10)		see table	
Approved	S. Frey	23.04.2025	Surface: blank		Drawing no.: 05-051-06	All dimensions in mm
Last change	M. Schuler	23.04.2025	Weight: see table	Scale: 2:1		Sheet 1 of 1

This drawing is the sole property of K2 Systems GmbH. It is protected by copyright and may only be copied, reproduced or distributed to a third party with explicit permission!