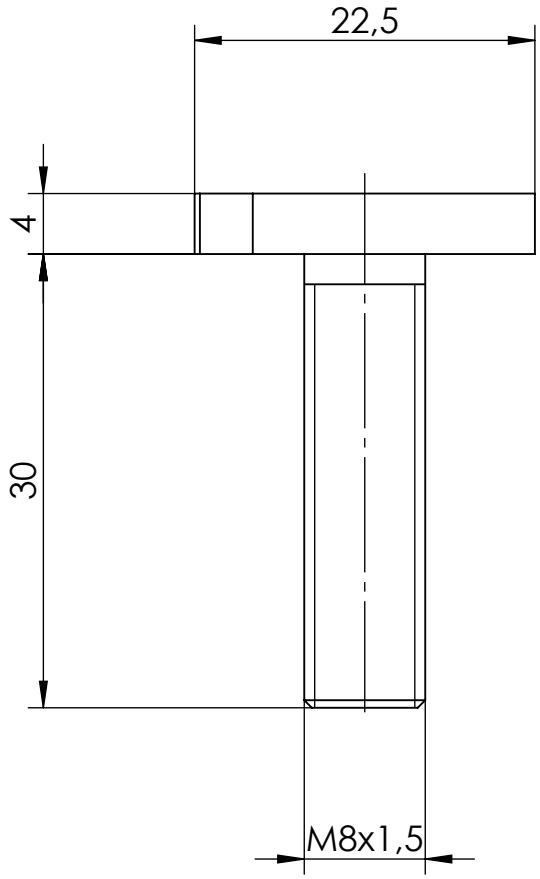

Isometric

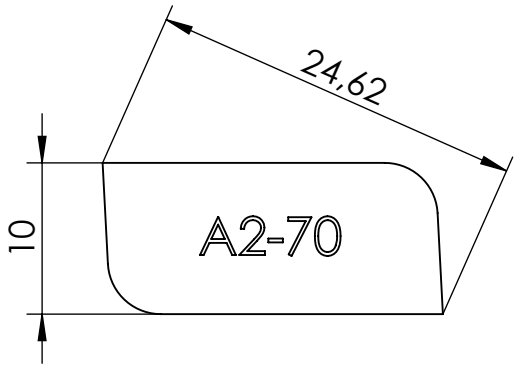

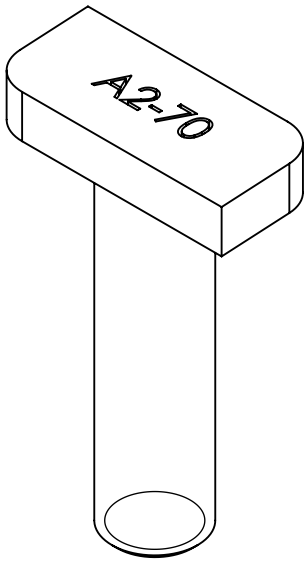

K2 Systems GmbH
Haldenstr. 1
71272 Renningen
Germany
+49 7159 42059-0

Designation:

Data sheet
T-Bolt 25/15 M8x30

	Name	Date	Material:		Item no.:	1000368	A4
Designed	Maaß	21.11.2015	1.4301 (X5CrNi18-10)				
Approved	S. Frey	14.04.2025	Surface: -		Drawing no.:	05-002-03	All dimensions in mm
Last change	M. Schuler	14.04.2025	Weight: ca. 18.64 g/pc	Scale: 2:1			Sheet 1 of 1

This drawing is the sole property of K2 Systems GmbH. It is protected by copyright and may only be copied, reproduced or distributed to a third party with explicit permission!