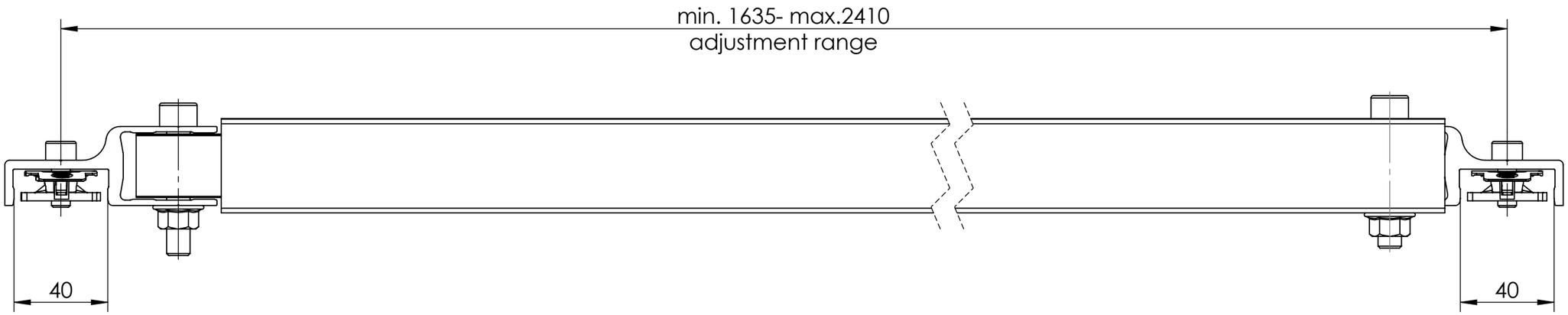

Detail Z
1 : 5

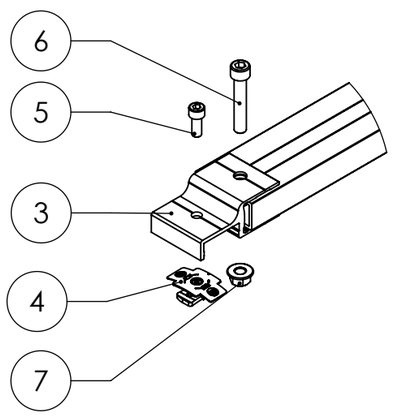

Detail Y
1 : 5

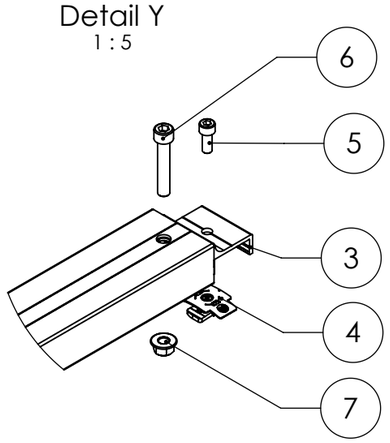

Isometric
1 : 10

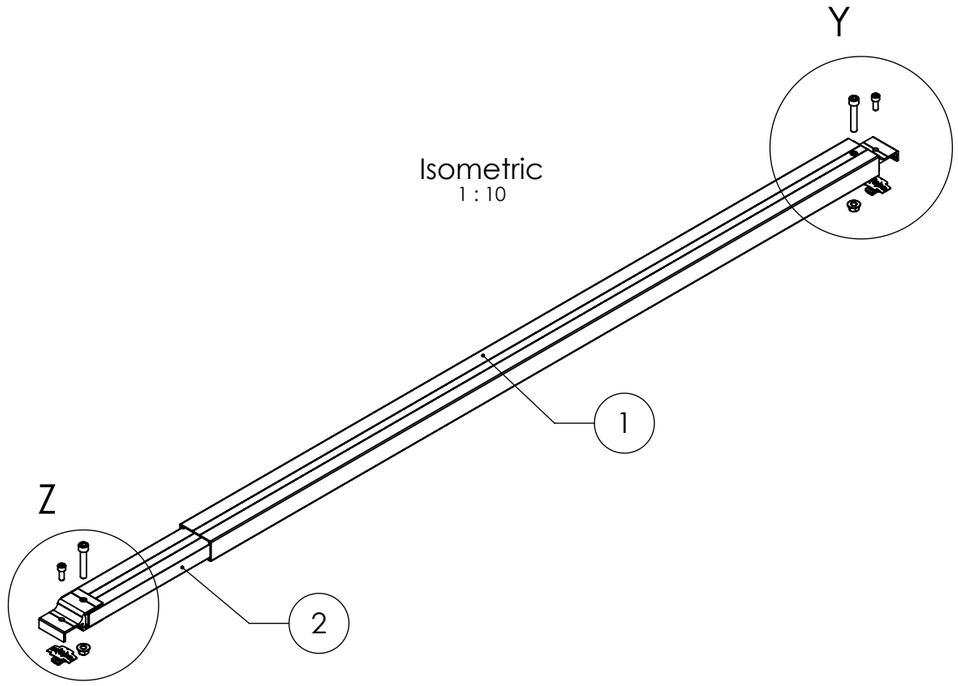

Pos.No.	Designation	Material	Quantity
1	Outer profile 1540 mm	EN AW 6063 T66	1
2	Inner profile	EN AW 6063 T66	1
3	T-Joint	EN AW 6063 T66	2
4	MK2 for Sets	1.4301/ PA/ TPE	2
5	Socket head bolt serrated - sim. ISO 4762 - M8x20	A2-70	2
6	Socket head bolt - ISO 4762 - M10x55	A2-70	2
7	Hexagon flange nut serrated - ISO 4161 - M10	A2-70	2

K2 Systems GmbH
Haldenstr. 1
71272 Renningen
Germany
+49 7159 42059-0

Designation:
Data sheet Dome FixPro L
1635 - 2410 mm

	Name	Date	Material:		Item no.:	2004144	A3
Designed	S. Frey	13.04.2021	see table				
Approved	M. Schuler	08.05.2025	Surface: -		Drawing no.:	07-009-04	All dimensions in mm
Last change	S. Frey	08.05.2025	Weight: ca. 4151.2 g/pc	Scale: 1:2			Sheet 1 of 1

This drawing is the sole property of K2 Systems GmbH. It is protected by copyright and may only be copied, reproduced or distributed to a third party with explicit permission!