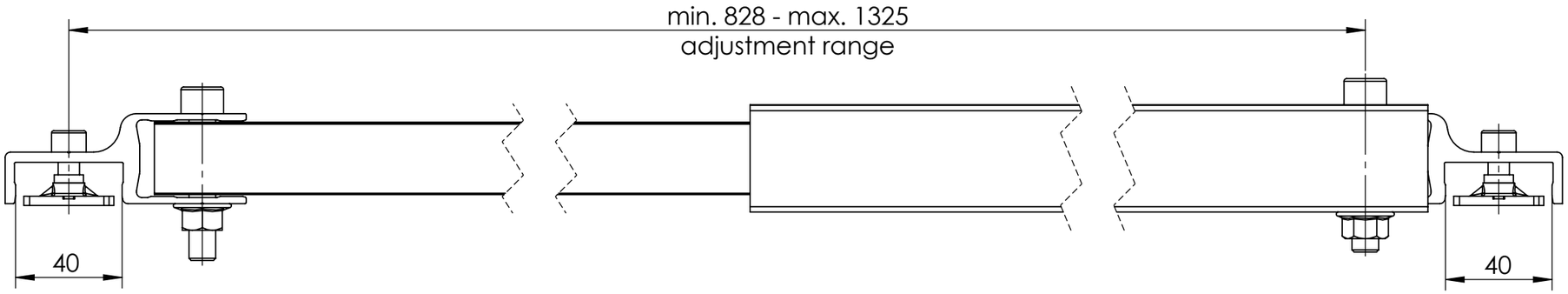

Detail Z
1 : 5

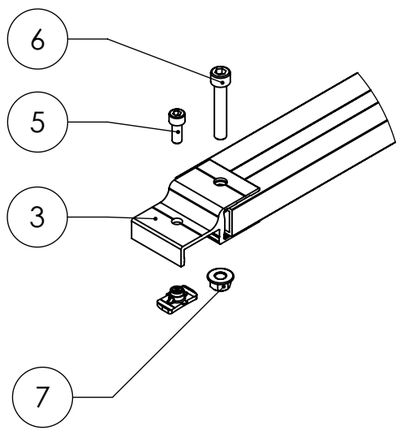

Detail Y
1 : 5

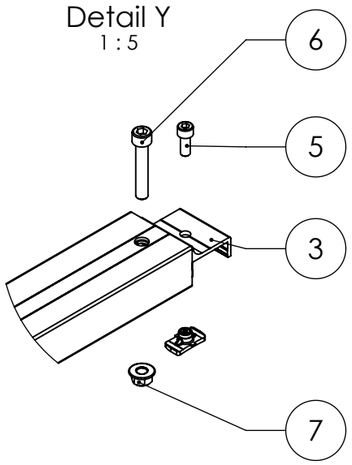

Isometric
1 : 10

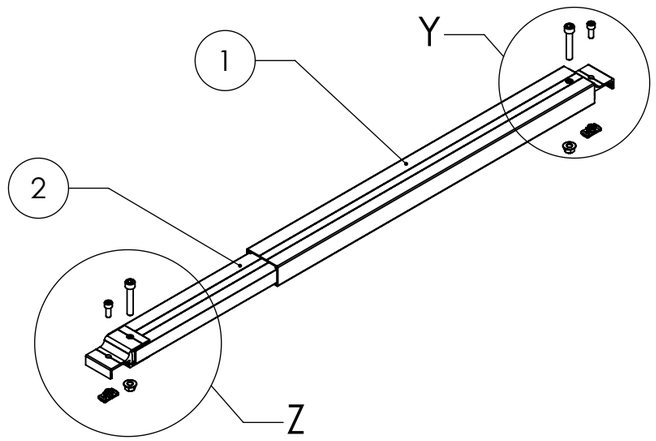

Pos.No.	Designation	Material	Quantity
1	Outer profile fixed connection S 730 mm	EN AW 6063 T66	1
2	Inner profile fixed connection S725mm	EN AW 6063 T66	1
3	T-Joint fixed connection	EN AW 6063 T66	2
4	MK2 for Sets	stainless steel (1.4301)/TPC	2
5	Socket head bolt, serrated - similar DIN 4762 - M8x20	A2-70	2
6	Socket head bolt DIN 4762 - M10x55	A2-70	2
7	Hexagon flange nut, serrated - similar DIN 6923 - M10	A2-70	2

K2 Systems GmbH
Haldenstr. 1
71272 Renningen
Germany
+49 7159 42059-0

Designation:

Data sheet Dome FixPro S

	Name	Date	Material:		Item no.:	2003384	A3
Designed	A. Soumpalas	21.12.2021	see table				
Approved	A. Soumpalas	02.04.2025	Surface: -		Drawing no.:	07-017-03	All dimensions in mm
Last change	M. Schuler	02.04.2025	Weight: ca. 2514.4 g/pc	Scale: 1:2			Sheet 1 of 1

This drawing is the sole property of K2 Systems GmbH. It is protected by copyright and may only be copied, reproduced or distributed to a third party with explicit permission!